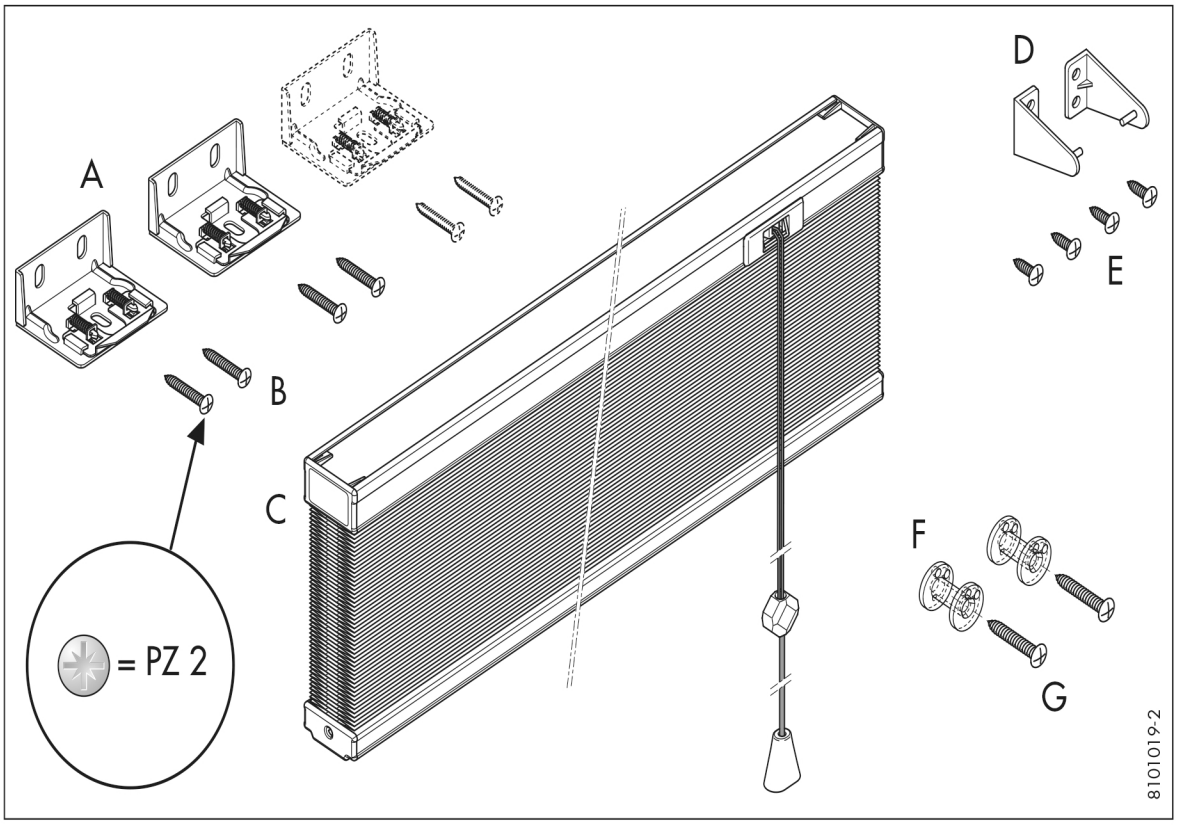
A
B
C
D
E
F
G
= PZ 2
8101019-2

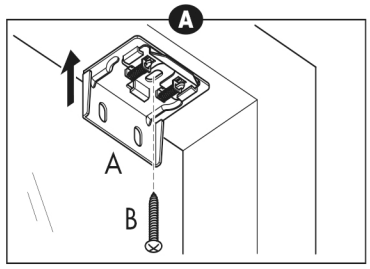
A
A
B

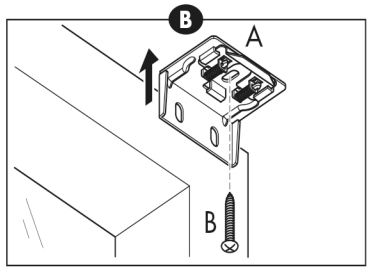
B
A
B

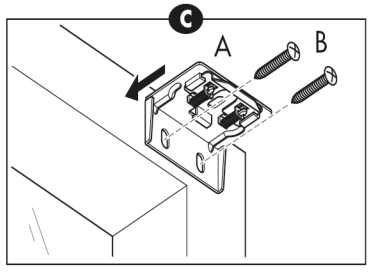
C
A
B

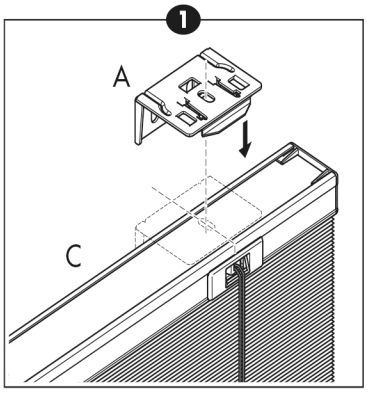
1
A
C

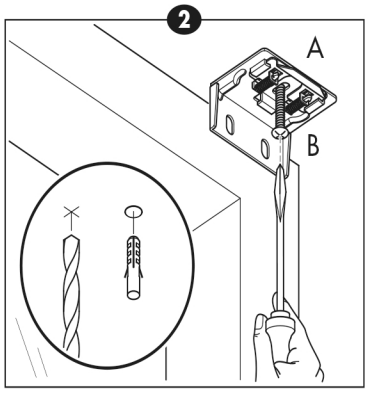
2
A
B

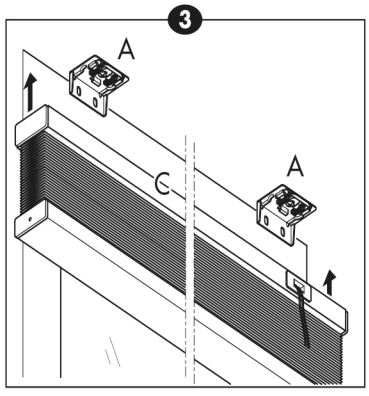
3
A
C
A

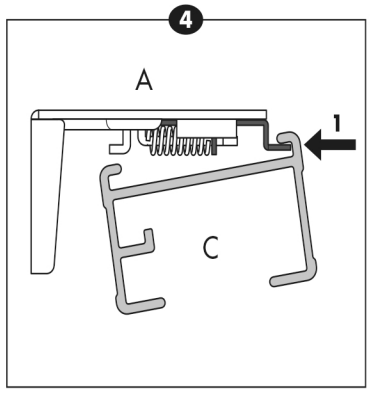
4
A
1
C

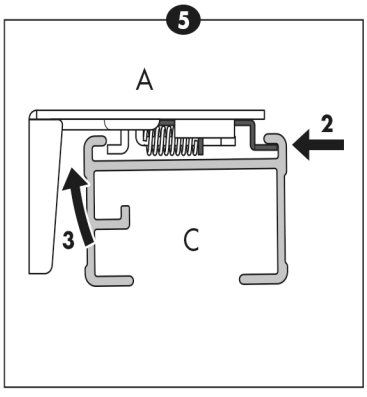
5
A
2
3
C

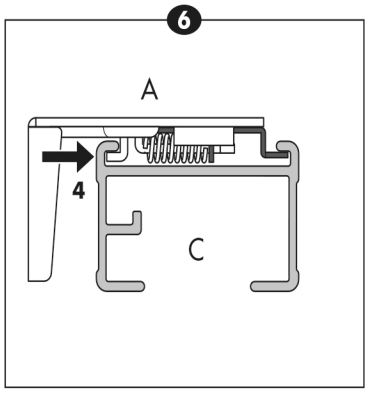
6
A
4
C

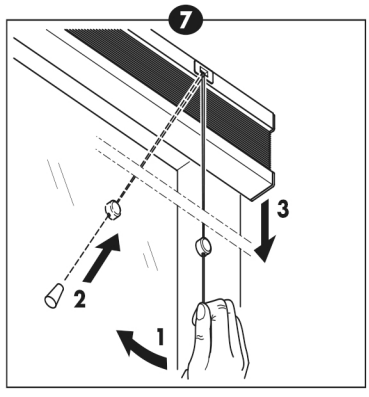
7
3
2
1

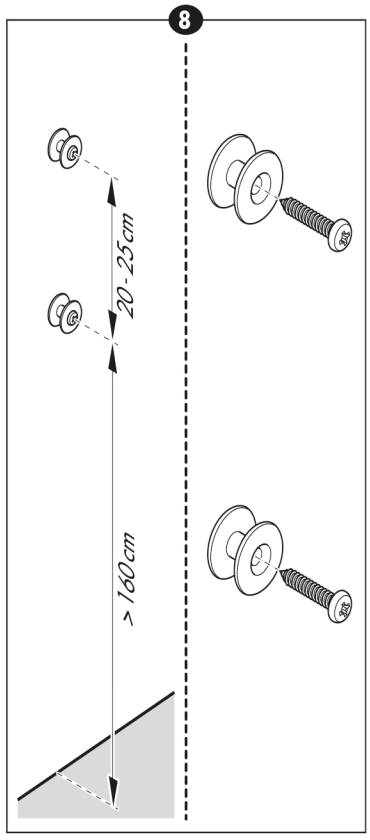
8
20 - 25cm
> 160cm

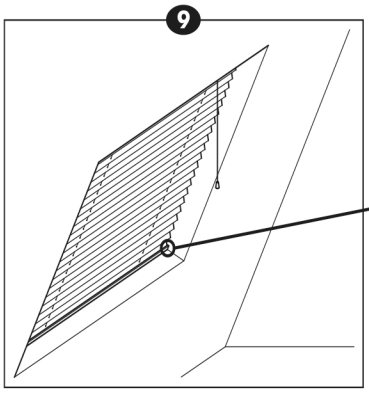
9

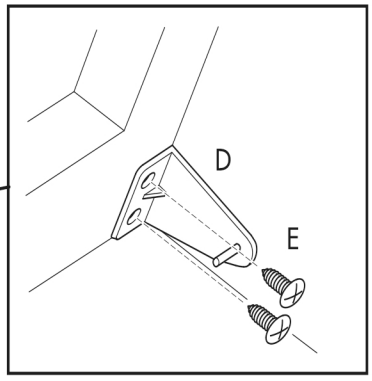
D
E